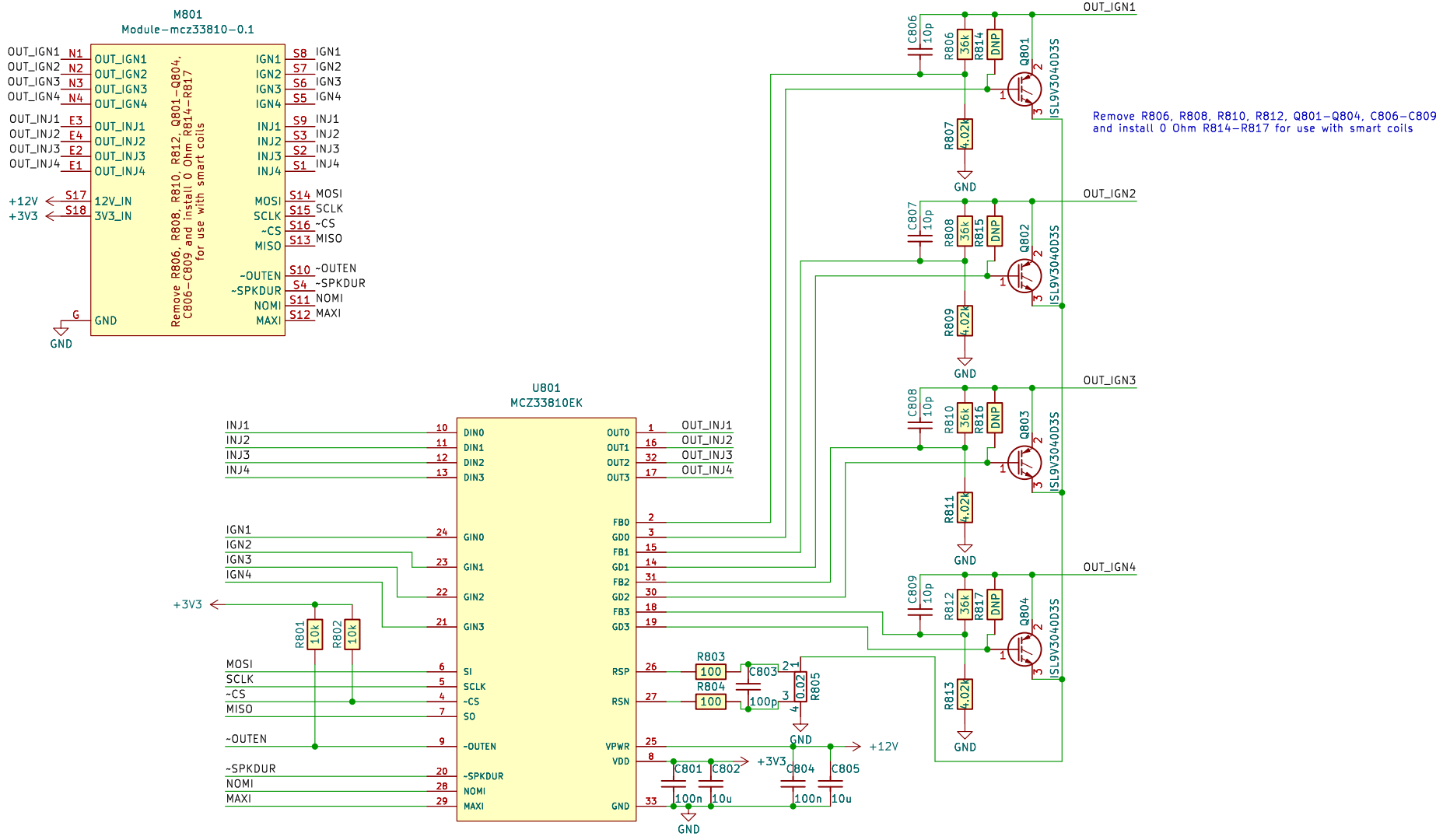

Sheet: /
File: hellen1-mcz33810.kicad_sch

Title: MCZ33810 module

Size: A4	Date: 2024-03-07	Rev: 0.1
KiCad E.D.A. kicad 7.0.9		Id: 1/1