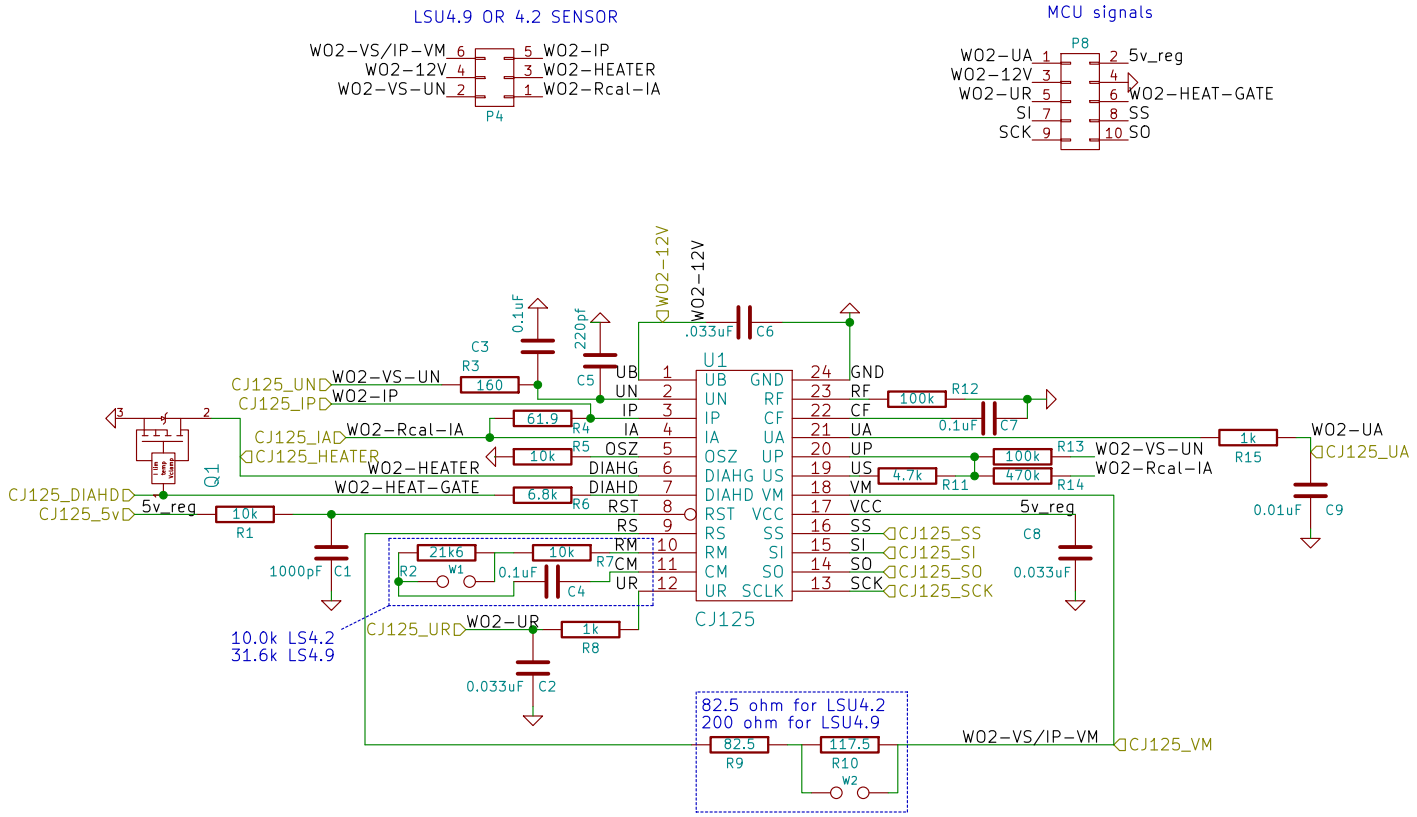

rusEFI.com		
Sheet: /		
File: O2_input_CJ125.sch		
Title: CJ125 Wide O2		
Size: A	Date: 2016-07-02	Rev: R0.1
KiCad E.D.A. kicad 4.0.1-stable		Id: 1/1