When configured for VR, do not populate W1002 or W1003.
These jumpers allow isolation which prevents the VR signal
from getting into the 5V or GND.

Many Hall sensors are set as a open collector sinking topology.
Those setups require a pull up resistor, and 1k ohm is a common size.
These pull up resistors are noted as R137 and R141 on this page.
You need to match these pull up resistors with your hall sensors requirements.
Often you need about 5mA of drive. See snippet from Cherry hall sensors to the right.
Some sensors are the inverse, and need a pull down resistor. These are less common.
These pull down resistors are noted as R801 and R802 on this page and are
not typically installed.

Recommended pull-up resistor values are as follows:					
Volts dc	5	9	12	15	24
Ohms	1k	1.8k	2.4k	3k	3k

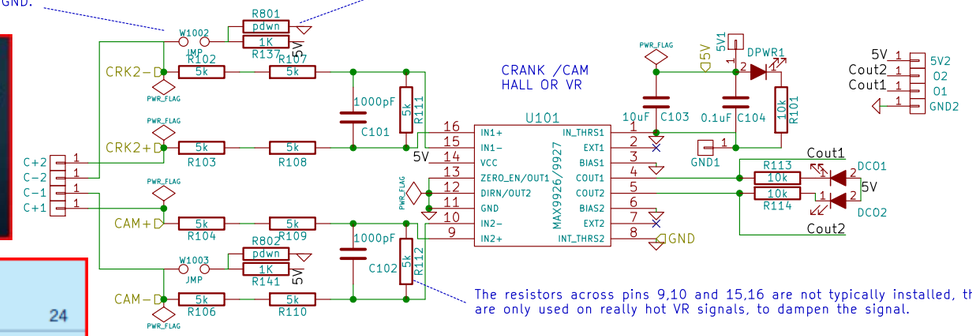

The resistors across pins 9,10 and 15,16 are not typically installed, they
are only used on really hot VR signals, to dampen the signal.

rusEFI by DAECU		
Sheet: / File: vrs_io_1.sch		
Title: VR Board vrs_io_1		
Size: B	Date: 2018−12−15	Rev: R0.2
KiCad E.D.A. kicad 4.0.5		Id: 1/1