PRODEMAND

YMMS: 2021 Volkswagen Arteon SEL Premium R-Line
Engine: 2.0L Eng
VIN:

Jul 16, 2023
License:
Odometer:

HEADLIGHTS

Fig 1: Headlights Circuit (1 of 2)

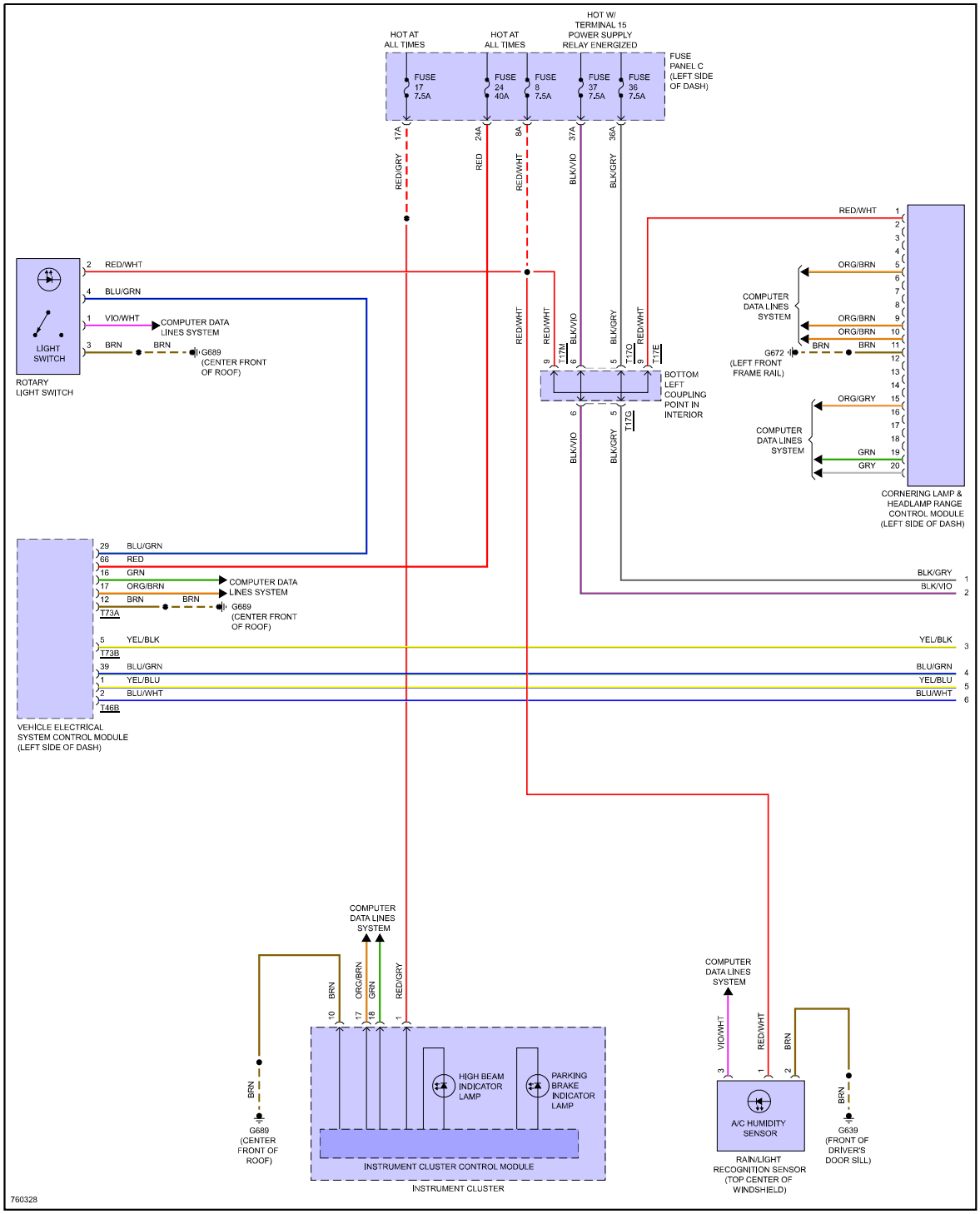
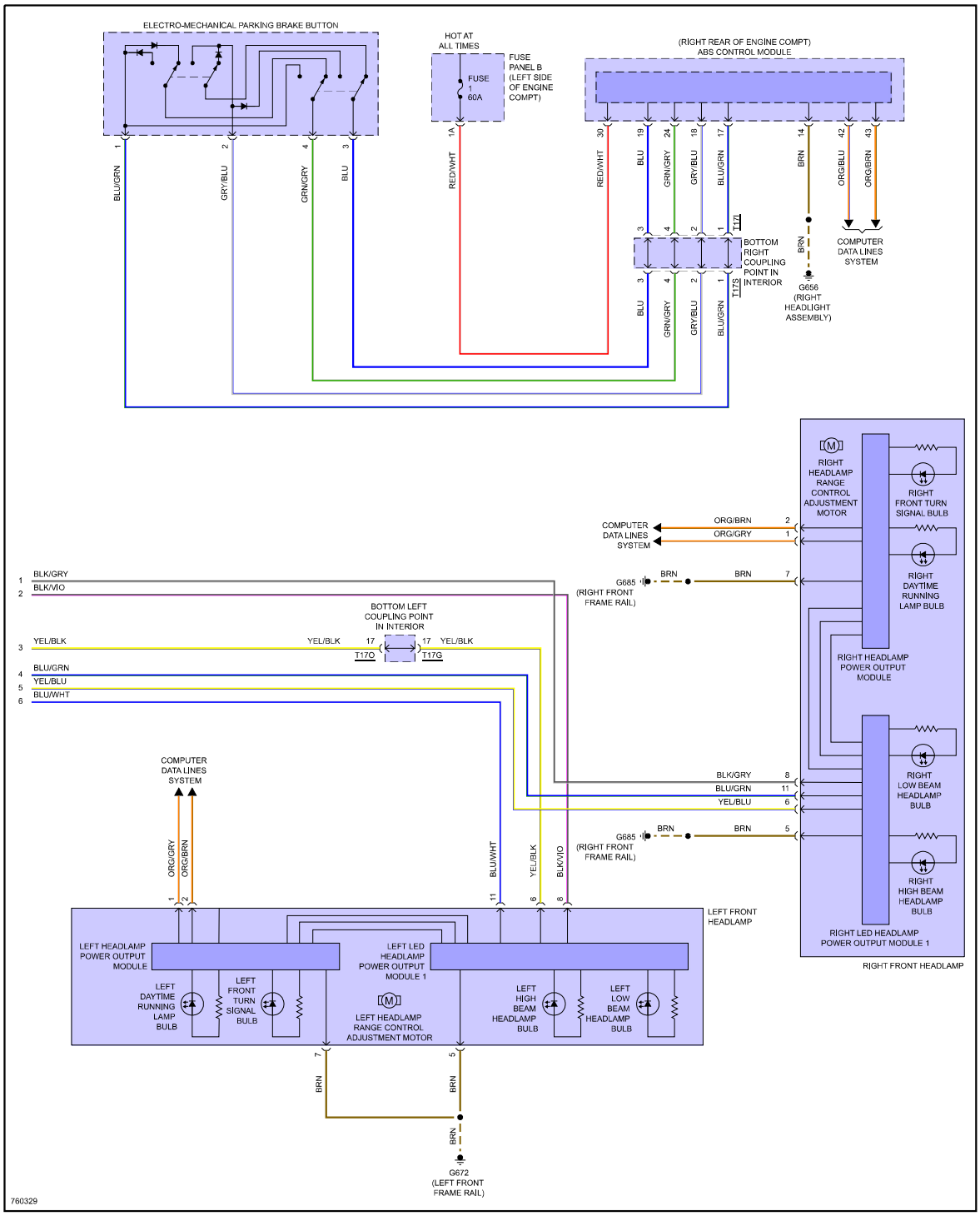
Fig 2: Headlights Circuit (2 of 2)